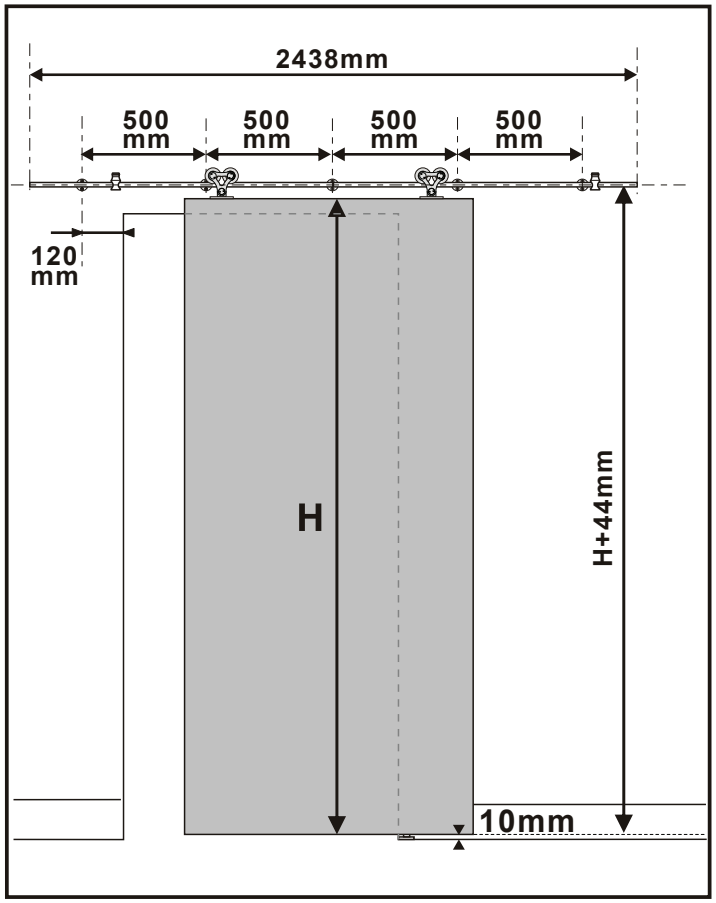


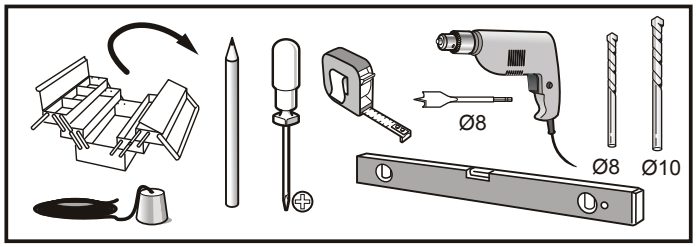


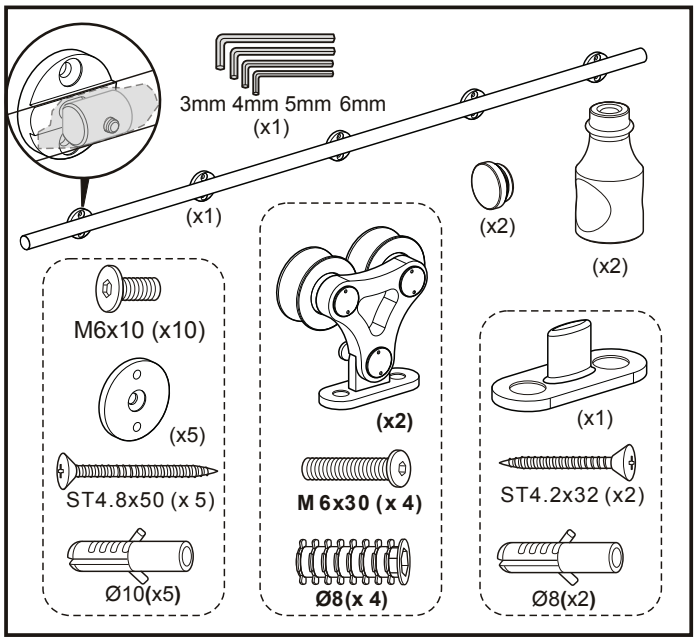


To obtain the maximum weight capacity, all fasteners must be mounted securely into solid wood of studs or blocking within the wall or wood mounted to the face of the wall.

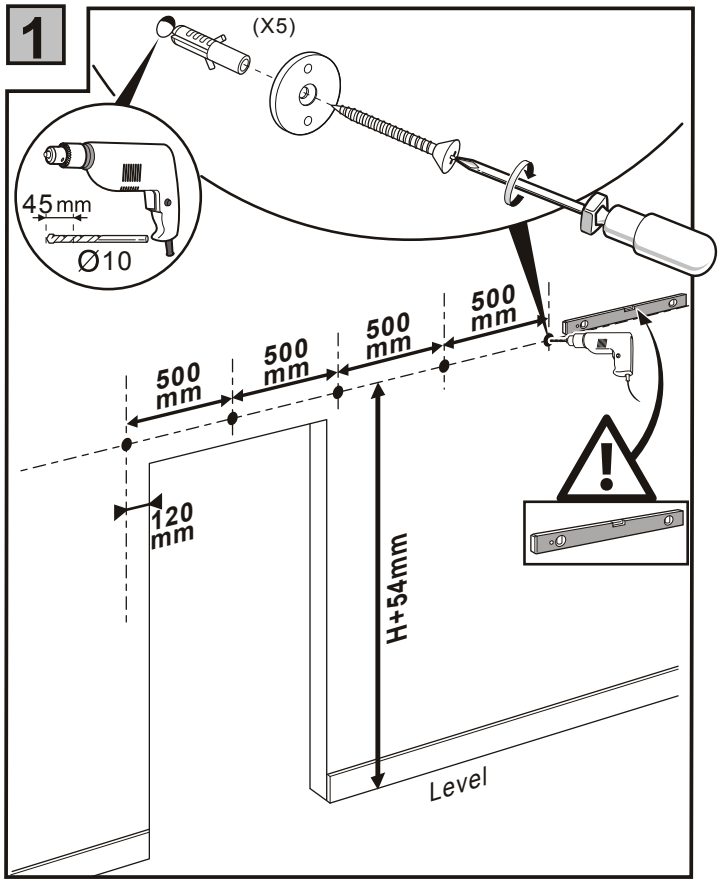


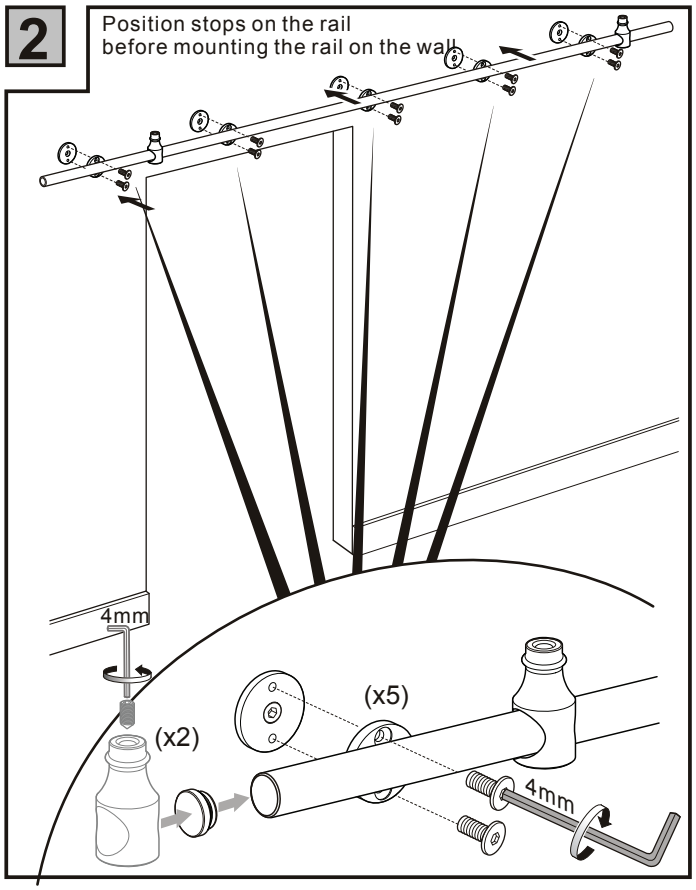

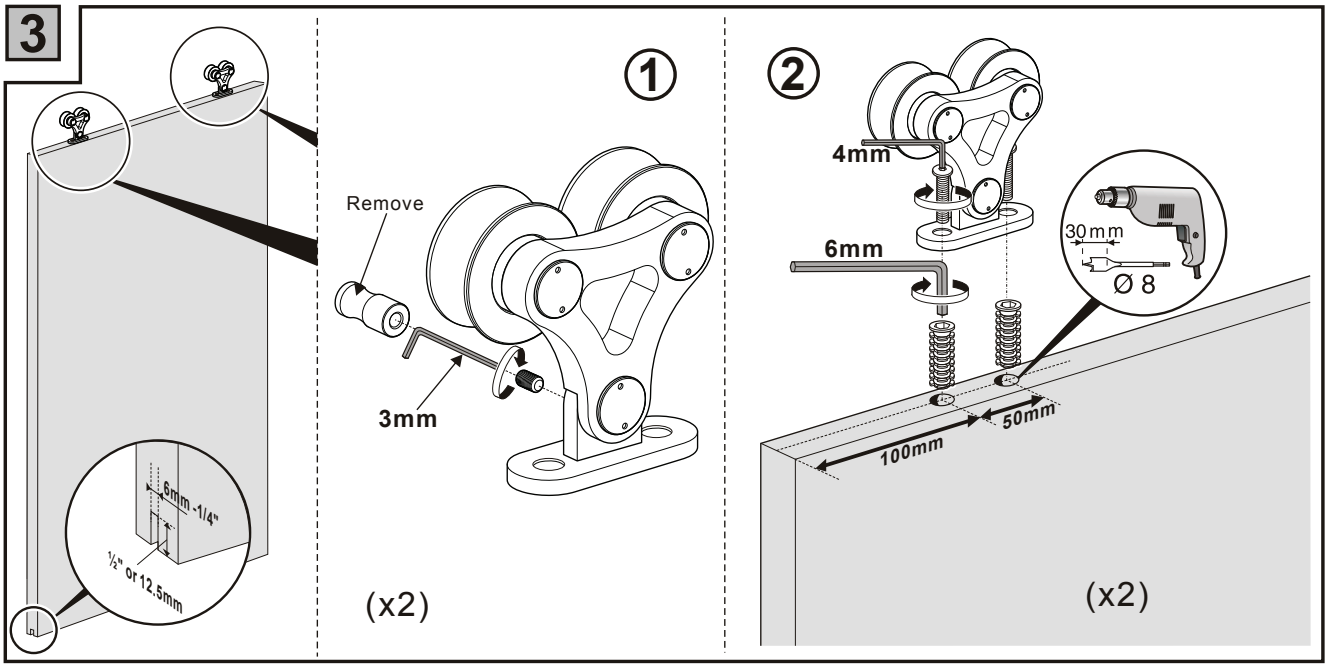
3
6mm -1/4"
½" or 12.5mm
1
Remove
3mm
(x2)
2
4mm
6mm
30mm
Ø 8
100mm
50mm
(x2)

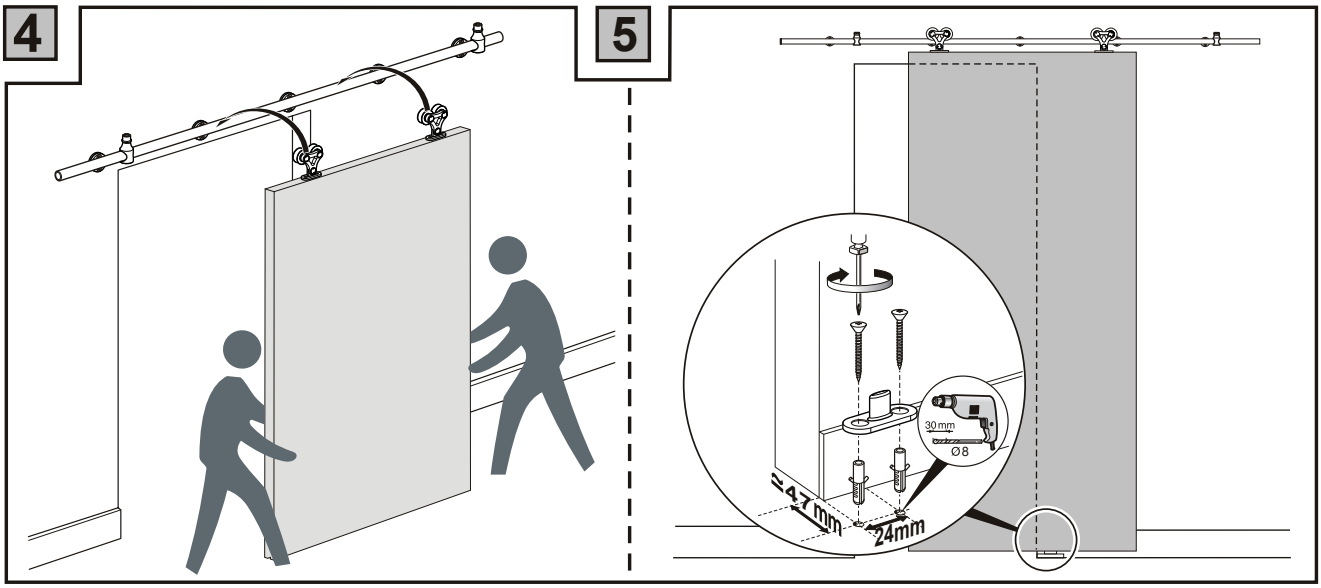
4
5
30mm
Ø8
≈4.7mm
24mm

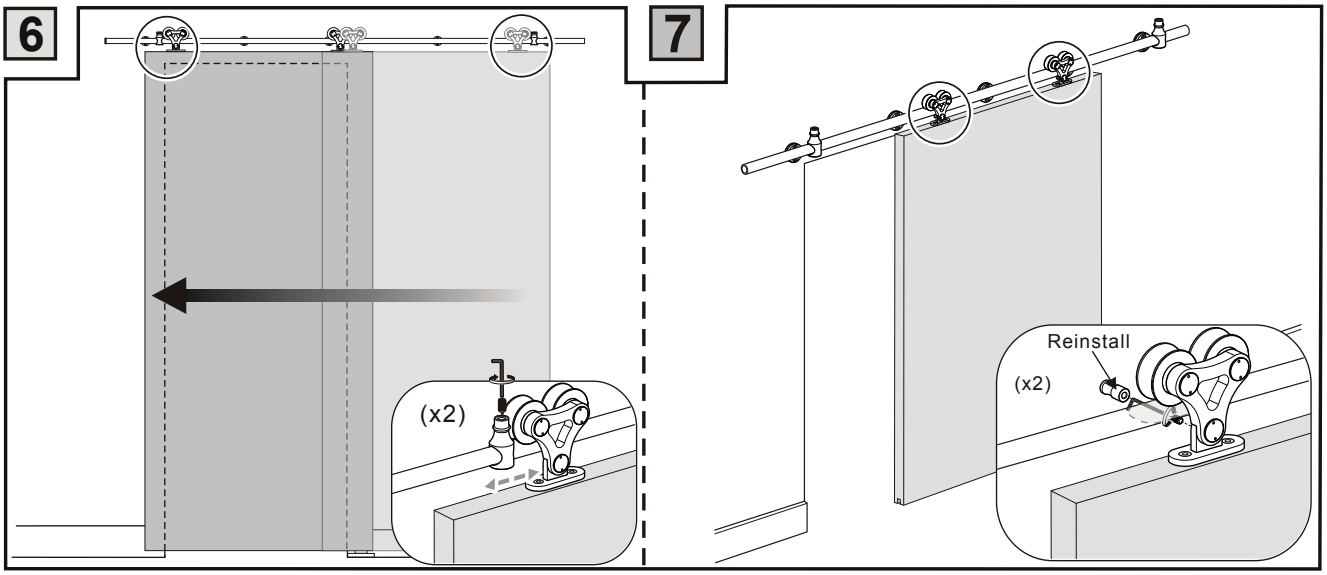
6
(x2)
7
Reinstall
(x2)